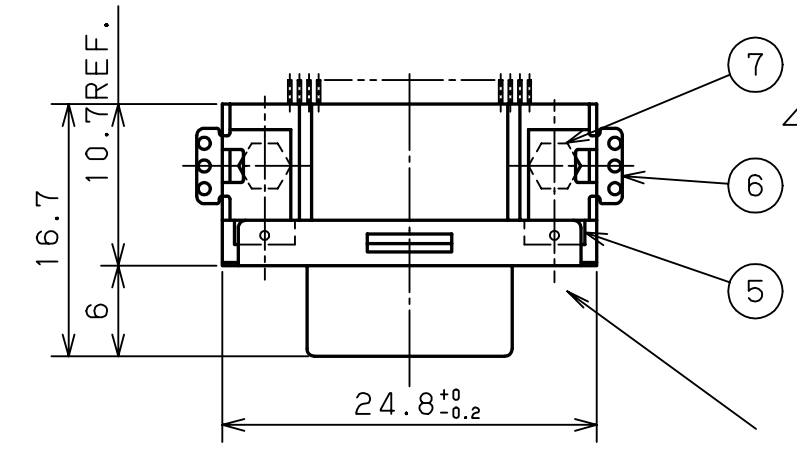

PART No.	TYPE	NOTE
HDR-EA26LFYPG1+	———	———
HDR-EA26LFYPG1-SLD+	SCREW LOCK TYPE	———
HDR-EA26LFYPG1-SLE+	SPRING LOCK TYPE (6.6)	———
HDR-EA26LFYPG1-SLF+	SCREW LOCK (PANEL 0.9)	SEE NOTE. #4
HDR-EA26LFYPG1-SLG+	SCREW LOCK (PANEL 1.2)	SEE NOTE. #4
HDR-EA26LFYPG1-SLK+	SPRING LOCK TYPE (3.3)	———

LOCK SCREWS

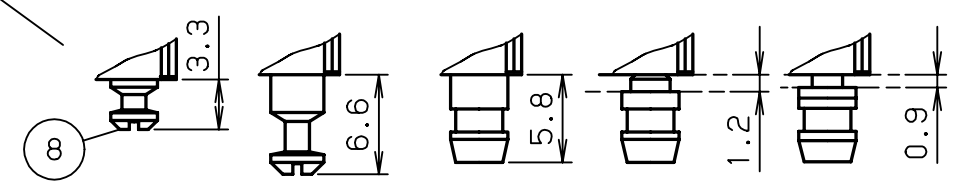

SPRING LOCK TYPE

SCREW LOCK TYPE M2x0.4

SCREW LOCK TYPE M2x0.4 PANEL MOUNT

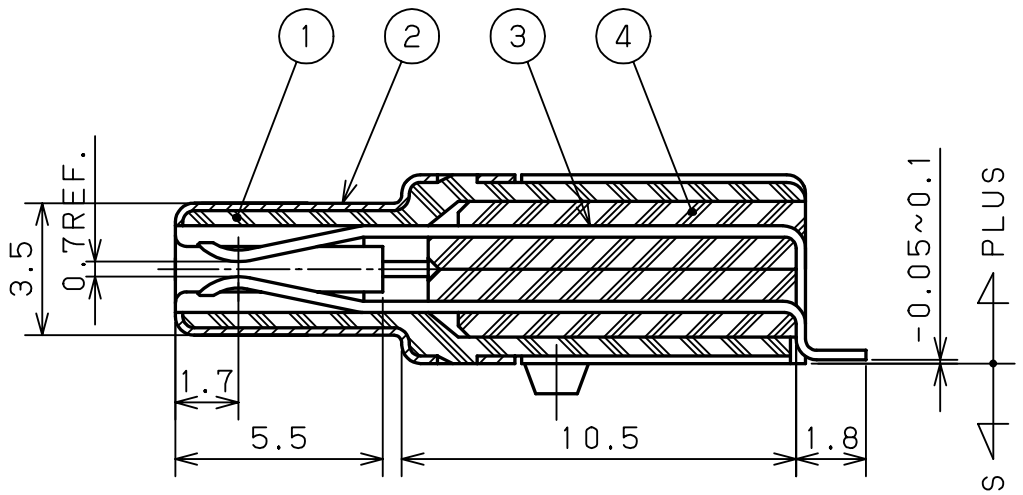

CONTACT DETAIL (5/1)

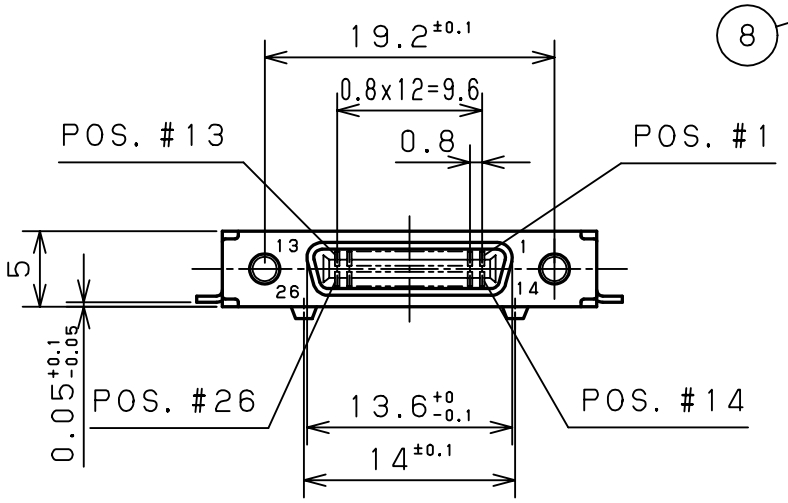

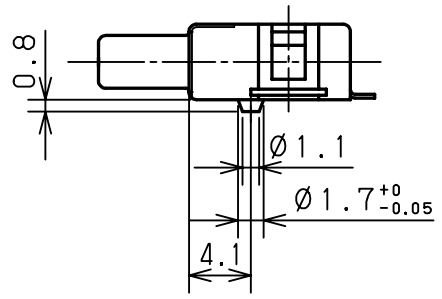

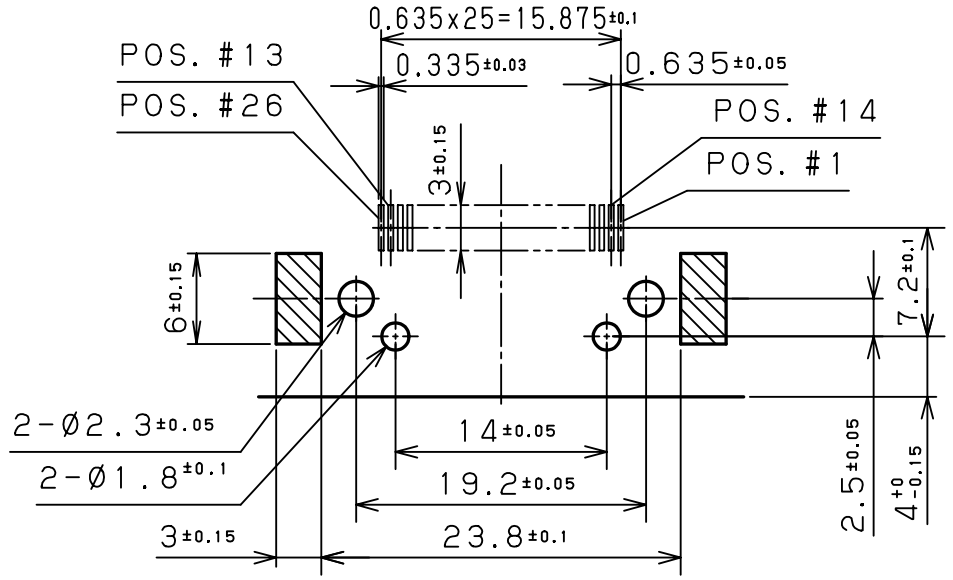

RECOMMENDED P.C.B. LAYOUT

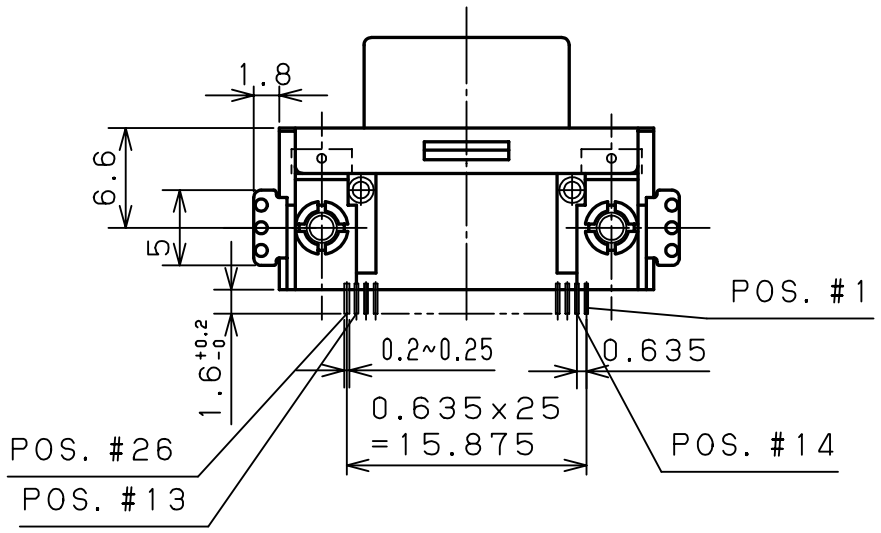

1. SPECIFICATION
   RATED CURRENT 0.5A
   RATED VOLTAGE 125V AC (r.m.s.)
2. CONTACT PLATING
   MATING AREA:0.76 MICRO METERS MINIMUM GOLD PLATING
   TERMINATION AREA:0.05 MICRO METERS MINIMUM GOLD PLATING

   UNDERPLATING:NICKEL PLATING
3. MATING CONNECTOR
   HDR-E26MAG1+
4. TWO LOCK SCREWS (ITEM#8) ARE SUPPLIED WITH CONNECTOR.

No.	PART NAME	MATERIAL	QTY	FINISH	NOTE
8	LOCK SCREW	STEEL	2	NICKEL PLATING	M2x0.4
7	HEX. NUT	BRASS	2	NICKEL PLATING	M2x0.4
6	EARTH PLATE	PHOSPHOR BRONZE	2	NICKEL PLATING	———
5	SQR. NUT	BRASS	2	NICKEL PLATING	M2x0.4
4	INSULATOR B	PPS (GF)	1	———	UL94V-0 BLACK COLOR
3	CONTACT	PHOSPHOR BRONZE	26	SEE NOTE #2	———
2	SHELL	STEEL	1	NICKEL PLATING	———
1	INSULATOR A	LCP (GF)	1	———	UL94V-0 BLACK COLOR

LTR.	DATE	BY	REV. DESCRIPT
3			
2			
1	Apr.11 2005	Y.K	Add P/N

DATE	SCALE	UNIT	3RD. A. P
May.18.2004	2 / 1	mm (INCH)	
APP. DATE&REV.			

DR.	DE.	CHK.	CHK.	APP.
Y.KATO	Y.KATO	———	C.NUNOKAWA	H.EBIHARA

HONDA TSUSHIN KOGYO CO., LTD.

NAME	0.8mm SPACING 26POS. RIGHTANGLE FEMALE CONNECTOR
PART NO.	HDR-EA26LFYPG1-( )+
REV.	1A

ID= HDR-EA26LFYPG1-@+ EA